Student Name: Markers Possible Solution Guide

Student Id: N/A

Campus: Laucala

Mode: N/A

IS222 – Database Management Systems

Semester I, 2022
Mode: Face to Face & Remote Students

Mid-Semester Test

Date: Thursday 19th May 2022; Time: 3.00 –4.00 PM (FJ Time)
Weight: 25%

You have 5 minutes to read this paper,

Followed by 55 minutes to complete this paper.

All Questions Are Compulsory

This MST will focus on the following learning outcomes for this course:

CLO1. Explain the fundamental concepts of various database management systems.
CLO3. Construct a data model for a relational database management system.

Time allowed: 60 mins

Total Marks: 40

Total Pages: 6

Weight: 25%

INSTRUCTIONS:

1. This exam is worth 25% of your coursework.
2. Answer ALL questions in this paper.
3. Write your ID # on all sheets in this booklet.
4. Zero for any Plagiarism case.

This study source was downloaded by 100000883726606 from coursesidekick.com on 04-27-2025 08:05:32 GMT -05:00

https://www.coursesidekick.com///16948110

SECTION A – [10 Marks]

Question 1:

i Explain three major steps of the database design process. [3 Marks]

1. Conceptual modeling: The process of identifying the entities, their properties, and the relationships among these entities that are part of the environment that the information system models. In our case, we used E-R model for conceptual modeling.
2. Logical modeling: The process of mapping the conceptual model to the primitives of the data model that is used. In the case of relational DBMSs, this is the process of defining the relational schema.
3. Physical modeling: The process of defining the physical organization characteristics (e.g., indexes, file structure) of the database.

*[0.5 marks for each step identification with no explanations]

ii Explain the concepts of a Primary key and Foreign key with significant examples. [2 Marks]

A primary key is a column or a set of columns in a table whose values uniquely identify a row in the table whereas a foreign key is a column or a set of columns in a table whose values correspond to the values of the primary key in another table.

***Or**

Primary Key:

A primary key is used to ensure data in the specific column is unique. It is a column cannot have NULL values. It is either an existing table column or a column that is specifically generated by the database according to a defined sequence.

Foreign Key:

A foreign key is a column or group of columns in a relational database table that provides a link between data in two tables. It is a column (or columns) that references a column (most often the primary key) of another table.

Example: Refer the figure below: [Shows student and student course]

Primary Key Example:

STUD_NO, as well as STUD_PHONE both, are candidate keys for relation STUDENT but STUD_NO can be chosen as the primary key (only one out of many candidate keys).

This study source was downloaded by 100000883726606 from coursesidekick.com on 04-27-2025 08:05:32 GMT -05:00

https://www.coursesidekick.com///16948110

Foreign key Example:

Example: Refer the figure –

STUD_NO in STUDENT_COURSE is a foreign key to STUD_NO in STUDENT relation.

STUDENT

STUD_NO	STUD_NAME	STUD_PHONE	STUD_STATE	STUD_COUNTRY	STUD_AGE
1	RAM	9716271721	Haryana	India	20
2	RAM	9898291281	Punjab	India	19
3	SUJIT	7898291981	Rajsthan	India	18
4	SURESH		Punjab	India	21

Table 1

STUDENT_COURSE

STUD_NO	COURSE_NO	COURSE_NAME
1	C1	DBMS
2	C2	Computer Networks
1	C2	Computer Networks

Table 2

*Please award marks with any similar possibilities.

iii Why is the use of DBMS recommended? Explain by listing three of its major advantages. [3 Marks]

A DBMS can **improve the data processes and increase business value of the organization's data assets**, freeing users across the organization from repetitive and time-consuming data processing tasks.

*Any three advantages should be fine out from below:

For examples [advantages]

1. **Faster data Access**
2. **Better data integration**
3. **Better Data Security**
4. Better Data Transferring
5. Better decision making
6. Increased end-user productivity
7. Reduction in data Redundancy
8. Simple to use i.e. [gives a simple and clear logical view of data]

   Etc.

iv What is a business rule? [2 marks]

A business rule is a statement that imposes some form of constraint on a specific aspect of the database, such as the elements within a field specification for a particular field or the characteristics of a given relationship.

*Or any similar is accepted, please award marks.

This study source was downloaded by 100000883726606 from coursesidekick.com on 04-27-2025 08:05:32 GMT -05:00

https://www.coursesidekick.com///16948110

SECTION B – [30 Marks]

Question 2:

Use the following description to answer parts (A) to (D) of this question

The data given below is a sample employee timesheet for employees at the Laucala ENI Section at the University of the South Pacific. This section is specifically responsible for construction and building works. It also has several sub-departments identified as Finance, Electrical, Plumbing, and Carpentry. Each department has many employees but each employee works for exactly one department. All employees of the Electrical, Plumbing, and Carpentry departments are required to submit a timesheet showing the jobs they have done at the end of each week. A sample timesheet for employee Sunia Ravono, who works for the Electrical department, is given in Figure 1.

Laucala ENI Section C/O The University of the South Pacific: Time Sheet						
Employee No: 124298 Sunia	**Name:** Title (Mr, Mrs, Miss, Ms): Ravono Mr					
Department: Electrical **Telephone Extension:** 5850 **Bank Account No:** 1231-456783-58						
Date	**Job No**	**Operation**	**Charge Rate ($)**	**Time Start**	**Time Finish**	**Time (Hrs Worked)**
31/07/06	3421	45 - Cabling	10	8.00	12.00	4
01/08/06	3421	45 - Cabling	10	8.00	12.00	4
01/08/06	3421	45 - Cabling	10	12.30	16.30	4
02/08/06	2310	21 – Faulty Wiring	16	8.00	10.00	2
02/08/06	3421	98 - Insulation	12	10.30	12.30	2
02/08/06	4812	21 – Faulty Wiring	16	13.00	16.30	3.5
					Total Hours Worked:	19.5

An employee can be involved in many jobs and each job can contain one or many operations. Each job has a unique number, description, and manager. Each operation has a unique ID number, description, and hourly charge. An operation can be performed by at least one employee but each employee specializes in exactly one job. We would like to design an MS Access database to be able to store the timesheets of all employees in the three departments (Electrical, Plumbing, and Carpentry). This database will then be used by the Finance department to make the payment of the employees in these three departments.

This study source was downloaded by 100000883726606 from coursesidekick.com on 04-27-2025 08:05:32 GMT -05:00

https://www.coursesidekick.com///16948110

i What are some techniques the database designer can apply to identify the business rules? [2 Mark]

Ans: Fact finding techniques: company documents, interviews, questionnaires, observation, exiting products.

ii Identify all possible business rules for the above case study. [4 Marks]

1. A department has one or many employees but each employee works in exactly one department.
2. A job has one or many operations and each operation can belong to no or many jobs.
3. An operation can be performed by one or many employees and each employee can be involved in one or many operations.
4. A job has one or many employees and each employee is assigned to one or many jobs.

iii Create a simple ERD showing a possible database design. Show the entities, and the relationship between the entities (show the connectivity, cardinality, and strength of the relationship. [4 Marks]

Markers Note: Please note **award full marks** if the student has **showed the connectivity, cardinality, and strength of the relationship**.

*If PK, FK and attributes not shown its fine, as per the question.

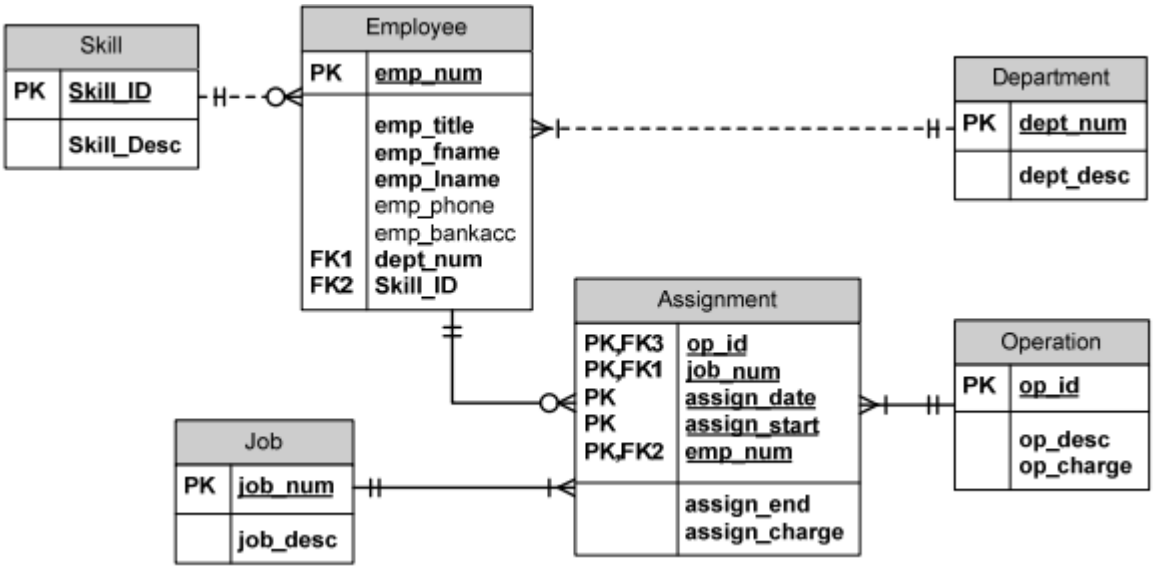

This study source was downloaded by 100000883726606 from coursesidekick.com on 04-27-2025 08:05:32 GMT -05:00

https://www.coursesidekick.com///16948110

The dependency diagram in the figure below indicates that authors are paid royalties for each book that they write for a publisher. The amount of the royalty can vary by author, book, and by the edition of the book.

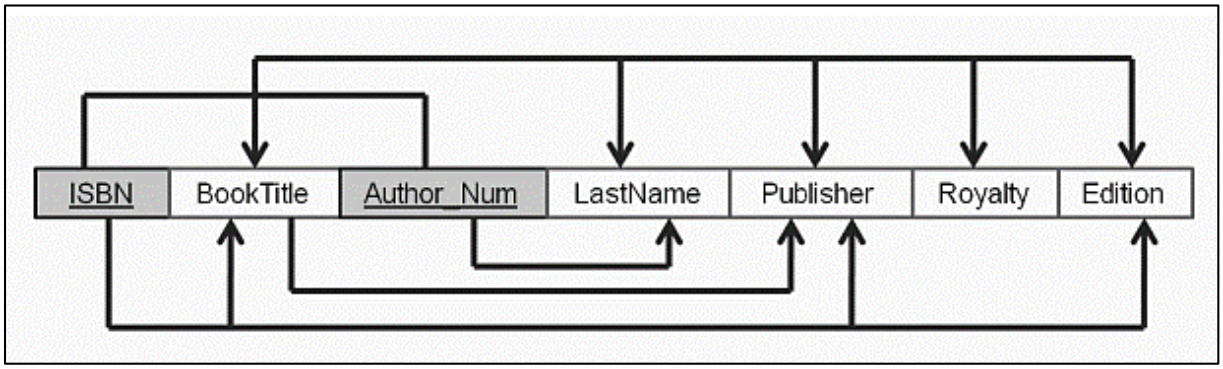

i Based on the dependency diagram, create a database whose tables are at least in 2NF, showing the dependency diagram for each table. [4 Marks]

The 2NF normalization results (in 1NF, no partial dependencies):

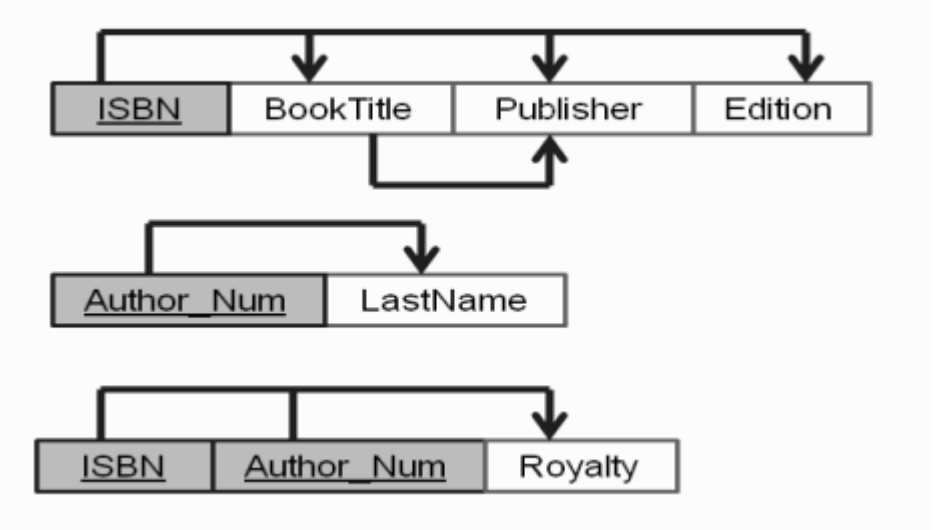

*But if the student has mentioned **at-least one dependencies out of the three given below**, please award marks...
For instance:

1. Desirable dependency (i.e., dependency based on the PK):

ISBN, Author_Num -> BookTitle, LastName, Publisher, Royalty, Edition

2. Partial dependency:

ISBN -> BookTitle, Publisher, Edition

Author_Num -> LastName

3. Transitive dependency:

BookTitle -> Publisher

This study source was downloaded by 100000883726606 from coursesidekick.com on 04-27-2025 08:05:32 GMT -05:00

https://www.coursesidekick.com///16948110

ii Create a database whose tables are at least in 3NF, showing the dependency diagram for each table. [4 marks]

The 3NF normalization results (in 2NF, no transitive dependencies):

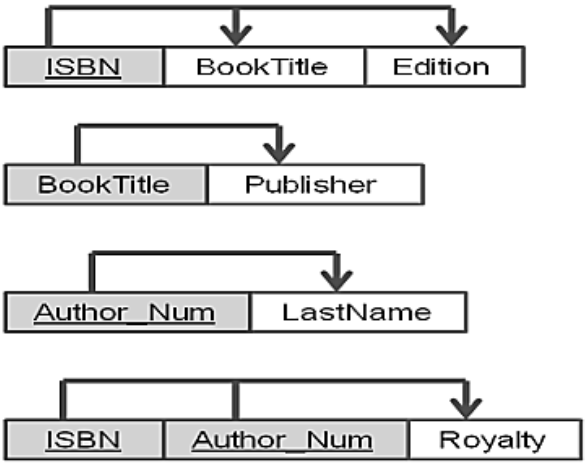

iii When is the normalization process used? [2 marks]

Normalization is a technique that is used **when designing and redesigning a database**.

*Or

Normalization is the process of organizing the data in the database. Normalization is used to minimize the redundancy from a relation or set of relations. It is also used to eliminate undesirable characteristics like Insertion, Update, and Deletion Anomalies.

iv The current database has two tables [Project and Employee]. Redesign, that is normalize, the database so that all the tables are in 3NF and create the dependency diagrams for all the tables in your re-designed database. A database designer has identified the following primary keys for the above two tables:

Table	Primary Key
Project	Project Num, Emp #, Work Date
Employee	Emp #

This study source was downloaded by 100000883726606 from coursesidekick.com on 04-27-2025 08:05:32 GMT -05:00

https://www.coursesidekick.com///16948110

Use these primary keys for the normalization process. [7marks]

The Trick in this question:

Note for the marker: It is expected that the student to state that due to the lack of information, the 3NF design cannot be continued any further.

Possible Structure: [Which cannot be converted into 3NF]

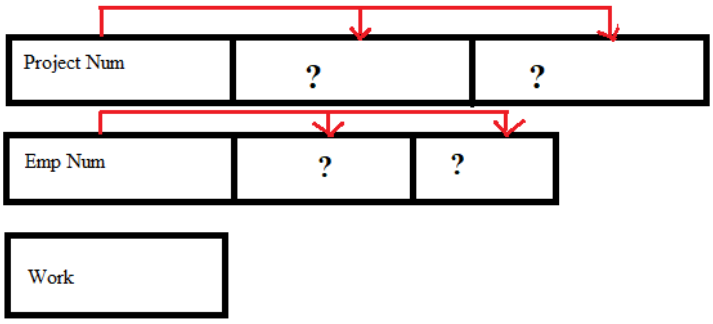

Or

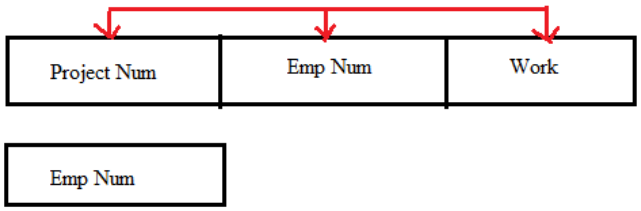

- 3 Marks for any similar diagram above.
- 1 Mark for Statement: The design cannot be completed from this point onwards.
- 3 Marks for the Explanation/Reasoning:

A database is said to meet the 3NF standards only if all the attributes are functionally dependent on solely the primary key. Thus, failure to meet the 3NF form standards in this case, further could not be formulated.

- The negative outcome of such circumstances in normalization [3NF] entails the chances of the initial input error.

v Briefly explain when 4NF is violated. [3 marks]

The fourth normal form is violated when the table has multiple independent multi-valued attributes. However, these multi-valued attributes can be determined by a common key.

*Or

A table violates the fourth normal form when it contains two or more independent multivalued dependencies.

This study source was downloaded by 100000883726606 from coursesidekick.com on 04-27-2025 08:05:32 GMT -05:00

https://www.coursesidekick.com///16948110

A Possible Example for Instance:

For example, assume that a student may take more than one course and have more than one major.

Thus the student has two multivalued dependencies **Student_ID→→Course** and **Student_ID→→Major**. 4NF is violated by the following table:

Student_ID	Course	Major
985235410	CP363	Computing
985235410	PC100	Physics
985235410	CP363	Physics
985235410	PC100	Computing
985235410	EN228	Physics
985235410	EN228	Computing

Or any relevant is excepted.

The End

This study source was downloaded by 100000883726606 from coursesidekick.com on 04-27-2025 08:05:32 GMT -05:00

https://www.coursesidekick.com///16948110